
423 mm
38 mm
14 mm

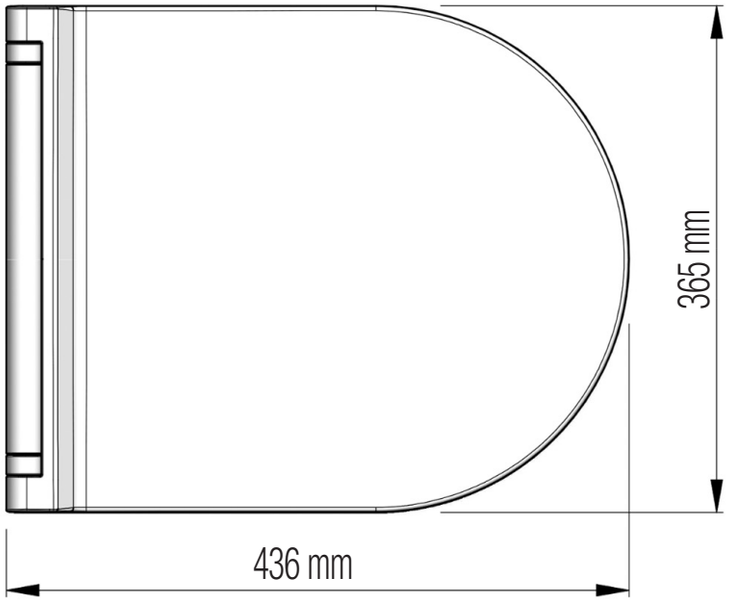
365 mm
436 mm

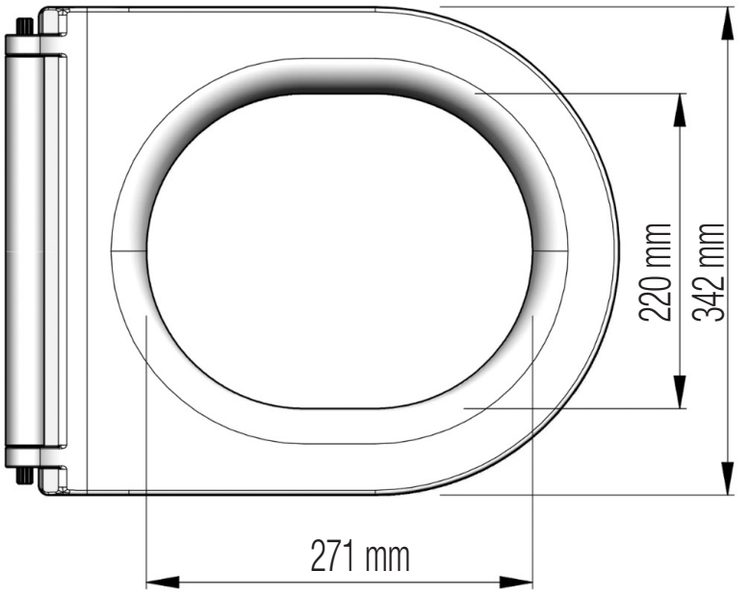
220 mm
342 mm
271 mm